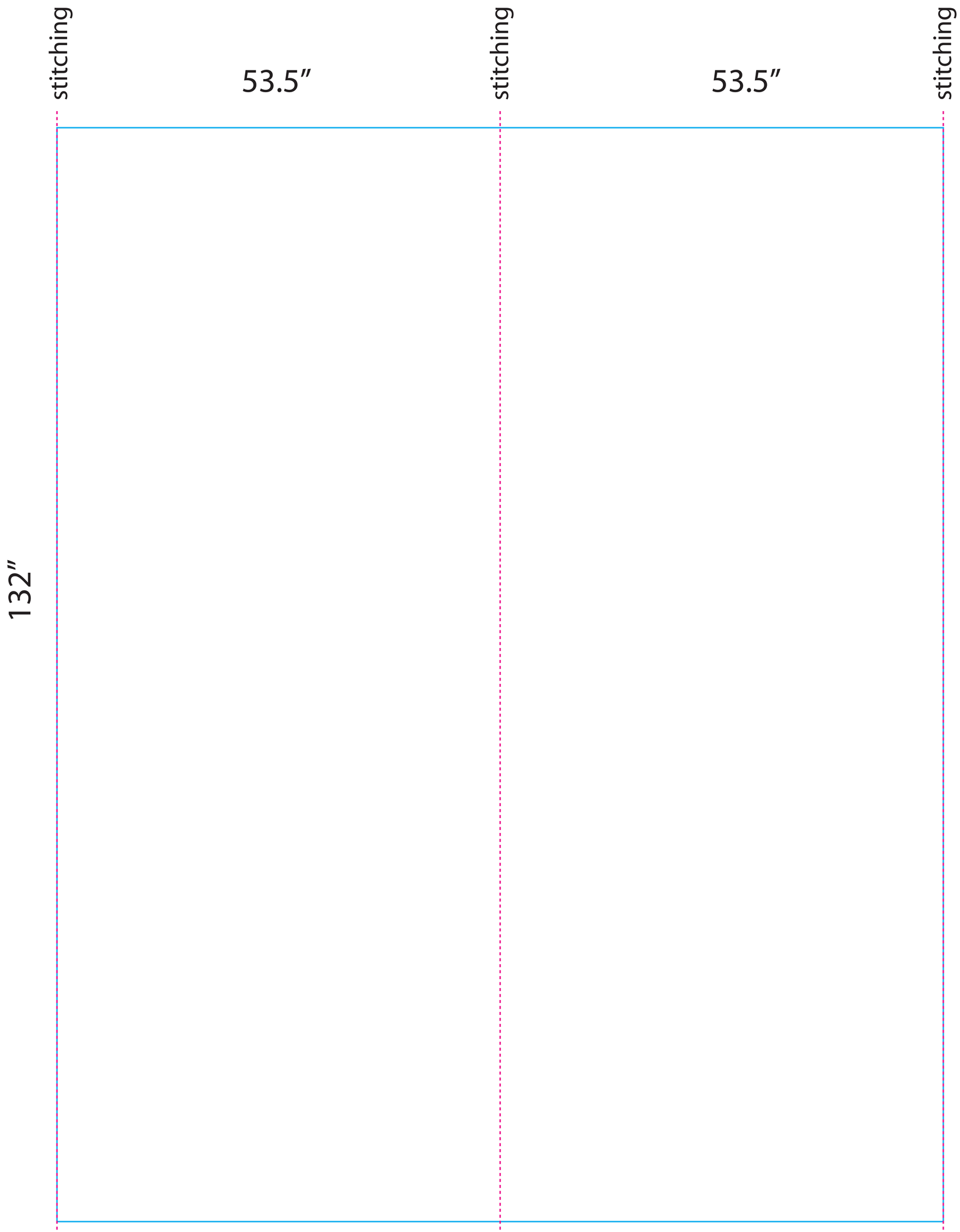

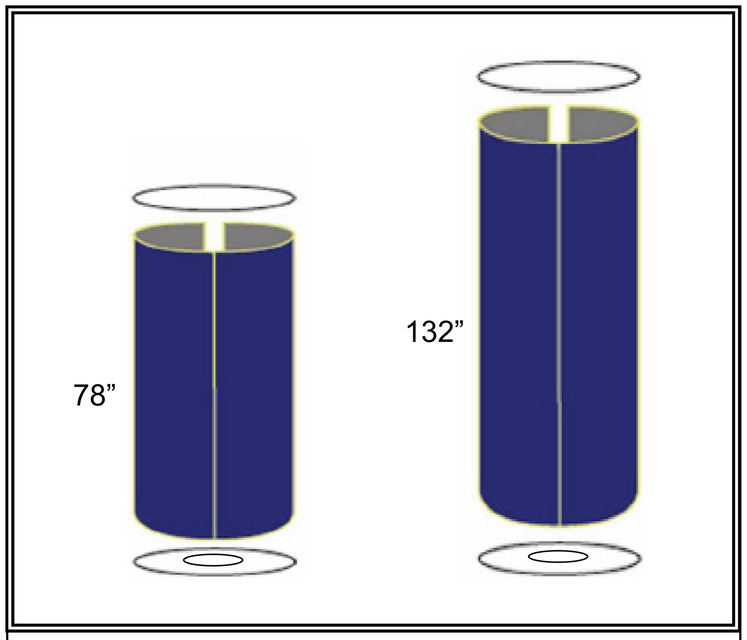

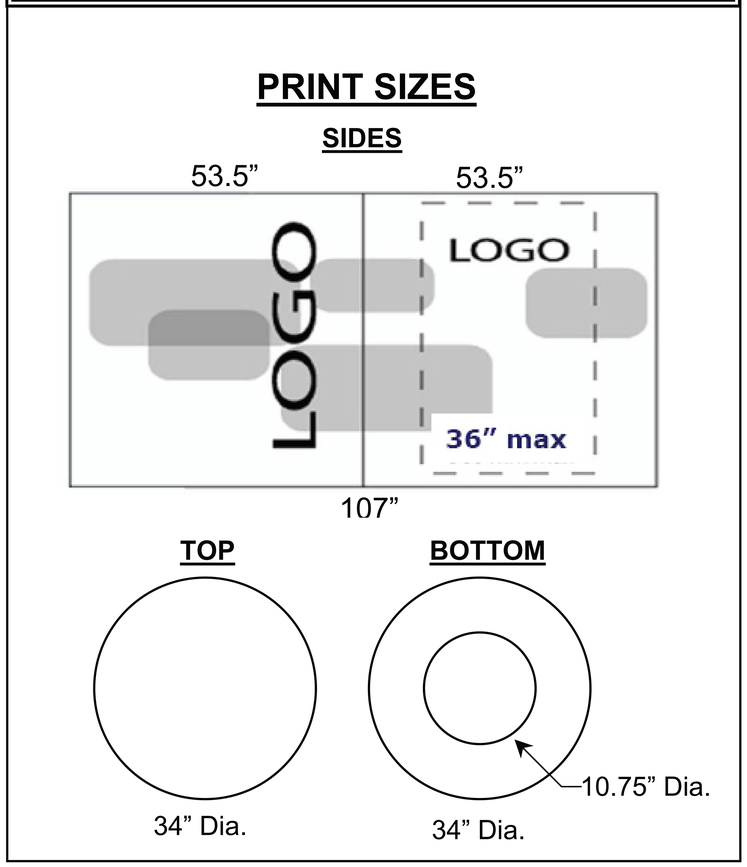

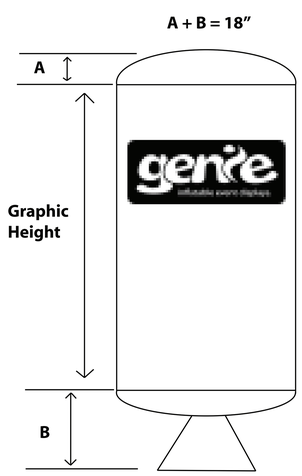

Sides are printed in two pieces and sewn together. Background image should cover the entire graphic, but please keep text and logos a maximum of 36″ wide (This is the optimal visual area when looking directly at the unit). Please keep text and logos at least 1″ from stitching.